FD1232 SERIES

Y.S. TECH

120x120x32mm

- **Airflow: 87.7~234.3 CFM**
- **Static Pressure: 4.2~24.4 mm-H_2O**
- **Blade / Housing:**
  Plastic Material UL 94V-0 P.B.T.
- **Lead Wire: UL1007 #22 AWG**
- **Weight: 219 g**

Model No.	Bearing	Rated Voltage	Operating Voltage Range	Speed	Max. Airflow	Max. Static Pressure	Current	Power Consumption	Life at 40°C L10	P-Q Curve	Noise Level
		VDC	VDC	RPM	CFM	mm-H_2O	mA	W	Hour		dB(A)
FD121232LB	2B	12	7~13.2	2100	87.7	4.2	330	3.96	80000	9	39.0
FD121232MB	2B		7~13.2	2500	99.3	6.1	450	5.40	80000	8	42.5
FD121232HB	2B		7~13.2	2900	115.0	8.0	580	6.96	75000	7	47.5
FD121232EB	2B		7~13.2	3300	137.3	9.4	840	10.08	65000	6	49.0
FD121232EB	2B		7~13.2	3500	157.7	11.8	700	8.40	65000	5	55.0
FD121232EB	2B		7~13.2	4100	184.8	13.8	1100	13.20	65000	4	58.5
FD121232UB	2B		7~13.2	4600	207.3	18.2	1600	19.20	65000	3	61.0
FD121232SB	2B		7~13.2	4900	220.8	21.2	2200	26.40	60000	2	62.0
FD241232LB	2B	24	12~26.4	2100	87.7	4.2	150	3.60	80000	9	39.0
FD241232MB	2B		12~26.4	2500	99.3	6.1	200	4.80	80000	8	42.5
FD241232HB	2B		12~26.4	2900	115.0	8.0	290	6.96	75000	7	47.5
FD241232EB	2B		12~26.4	3500	157.7	11.8	360	8.64	65000	5	55.0
FD241232UB	2B		12~26.4	4600	207.3	18.2	750	18.00	65000	3	61.0
FD241232SB	2B		12~26.4	5200	234.3	24.4	1000	24.00	60000	1	63.5
FD481232LB	2B	48	24~56.0	2100	83.3	4.3	90	4.32	80000	9	39.5
FD481232MB	2B		24~56.0	2500	99.3	6.1	130	6.24	80000	8	42.5
FD481232HB	2B		24~56.0	2900	115.0	8.0	190	9.12	75000	7	47.0
FD481232EB	2B		24~56.0	3500	157.7	11.8	210	10.08	65000	5	55.0
FD481232UB	2B		24~56.0	4600	207.3	18.2	450	21.60	65000	3	61.0
FD481232SB	2B		24~56.0	5200	234.3	24.4	600	28.80	60000	1	63.5

2B: 2-ball bearing L: sintetico bearing S: sleeve bearing

Voltage Available
05 12 24 48

Bearing System Available
2B L S

Function Available
N A I F R Q S T M V C P D W U

PERFORMANCE P-Q CURVE

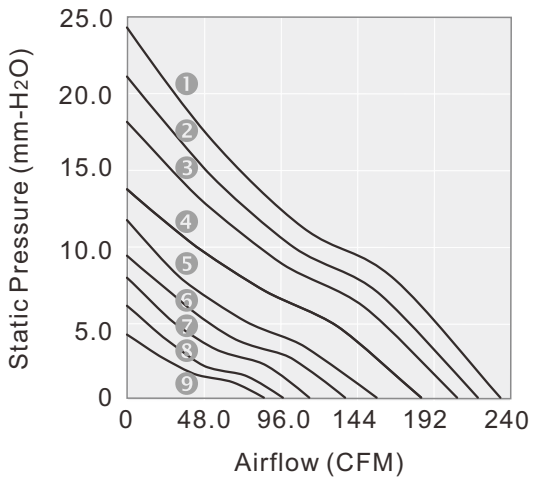

OUTLINE DIMENSIONS

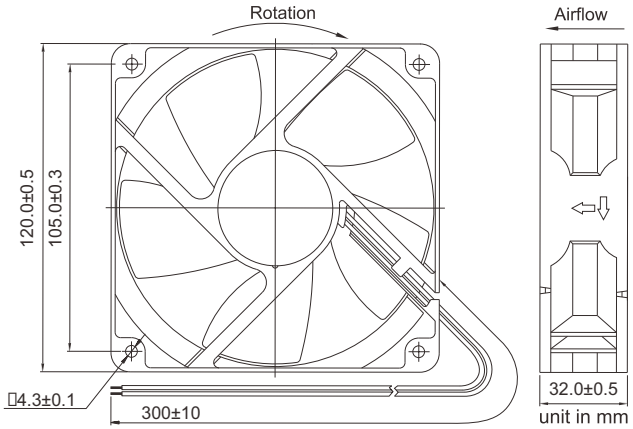

Please refer to *Model Numbering System* for bearing, function and speed level indication.
Specifications are subject to changes without notice. Please refer to the formally issued product specification via contacting Y.S. TECH sales department.
Visit Y.S. TECH web site at *http://www.ystech.com.tw* for updated information. Customized Specifications are designed accordingly