FD4010 SERIES

Y.S. TECH

40x40x10mm

- **Airflow: 4.5~9.2 CFM**
- **Static Pressure: 2.0~6.4 mm-H_2O**
- **Blade / Housing:**
  Plastic Material UL 94V-0 P.B.T.
- **Lead Wire: UL1007 #26 AWG**
- **Weight: 15 g**

Model No.	Bearing	Rated Voltage	Operating Voltage Range	Speed	Max. Airflow	Max. Static Pressure	Current	Power Consumption	Life at 40°C L10	P-Q Curve	Noise Level
		VDC	VDC	RPM	CFM	mm-H_2O	mA	W	Hour		dB(A)
FD054010LB	2B		4~5.5	4500	4.5	2.0	90	0.45	80000	5	21.5
FD054010MB	2B		4~5.5	5500	5.6	2.9	130	0.65	80000	4	26.5
FD054010HB	2B	05	4~5.5	6500	6.6	4.1	170	0.85	75000	3	29.0
FD054010EB	2B		4~5.5	7500	8.1	5.4	250	1.25	65000	2	34.5
FD054010EB	2B		4~5.5	8000	8.5	6.1	300	1.50	65000	0	36.5
FD124010LB	2B		7~13.2	4500	4.5	2.0	45	0.54	80000	5	21.5
FD124010MB	2B		7~13.2	5500	5.3	2.9	65	0.78	80000	4	25.0
FD124010HB	2B	12	7~13.2	6500	6.6	4.1	75	0.90	75000	3	29.0
FD124010EB	2B		7~13.2	7500	8.1	5.4	100	1.20	65000	2	34.5
FD124010EB	2B		7~13.2	8500	9.2	6.4	120	1.44	65000	1	37.0
FD244010LB	2B		12~26.4	4500	4.5	2.0	50	1.20	80000	5	21.5
FD244010MB	2B	24	12~26.4	5500	5.3	2.9	60	1.44	80000	4	25.0
FD244010HB	2B		12~26.4	6500	6.6	4.1	70	1.68	75000	3	29.0

2B: 2-ball bearing L: sintetico bearing S: sleeve bearing

Voltage Available
05 12 24 48

Bearing System Available
2B L S

Function Available
N A I F R Q S T M V C P D W U

PERFORMANCE P-Q CURVE

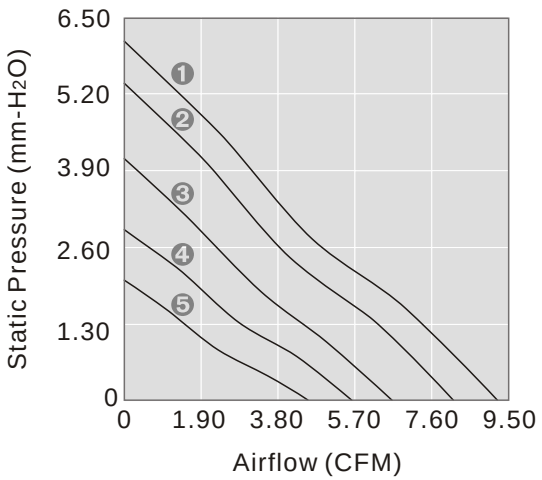

OUTLINE DIMENSIONS

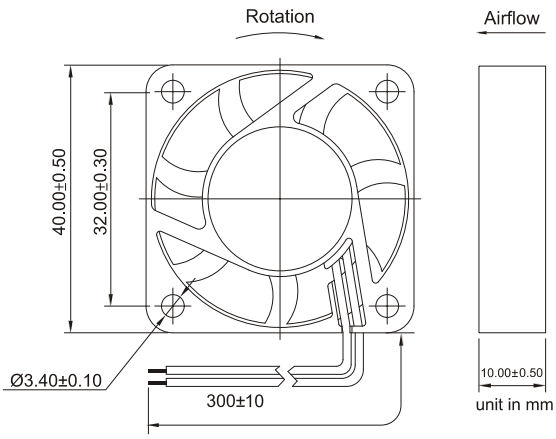

Please refer to *Model Numbering System* for bearing, function and speed level indication.
Specifications are subject to changes without notice. Please refer to the formally issued product specification via contacting Y.S. TECH sales department.
Visit Y.S. TECH web site at *http://www.ystech.com.tw* for updated information. Customized Specifications are designed accordingly