FD4020-H SERIES

Y.S. TECH

40x40x20mm

- **Airflow: 5.7~12.0 CFM**
- **Static Pressure: 3.2~11.5 mm-H_2O**
- **Blade / Housing:**
  Plastic Material UL 94V-0 P.B.T.
- **Lead Wire: UL1007 #26 AWG**
- **Weight: 24 g**

Model No.	Bearing	Rated Voltage	Operating Voltage Range	Speed	Max. Airflow	Max. Static Pressure	Current	Power Consumption	Life at 40°C L10	P-Q Curve	Noise Level
		VDC	VDC	RPM	CFM	mm-H_2O	mA	W	Hour		dB(A)
FD124020LB -H	2B	12	7~13.2	5000	5.7	3.2	70	0.84	80000	5	20.0
FD124020MB-H	2B		7~13.2	6300	7.2	5.2	100	1.20	80000	4	25.5
FD124020HB-H	2B		7~13.2	7600	9.0	6.4	140	1.68	75000	3	29.5
FD124020EB-H	2B		7~13.2	8900	10.5	9.2	170	2.04	65000	2	33.5
FD124020UB-H	2B		7~13.2	10000	12.0	11.5	210	2.52	65000	1	37.5
FD244020LB -H	2B	24	12~26.4	5000	5.7	3.2	40	0.96	80000	5	20.0
FD244020MB-H	2B		12~26.4	6300	7.2	5.2	50	1.20	80000	4	25.5
FD244020HB-H	2B		12~26.4	7600	9.0	6.4	70	1.68	75000	3	29.5
FD244020EB-H	2B		12~26.4	8900	10.5	9.2	100	2.40	65000	2	33.5
FD244020UB-H	2B		12~26.4	10000	12.0	11.5	130	3.12	65000	1	37.5

2B: 2-ball bearing L: sintetico bearing S: sleeve bearing

Voltage Available
05 **12** **24** 48

Bearing System Available
2B **L** S

Function Available
N A **I** **F** R Q S T M V C P D W U

PERFORMANCE P-Q CURVE

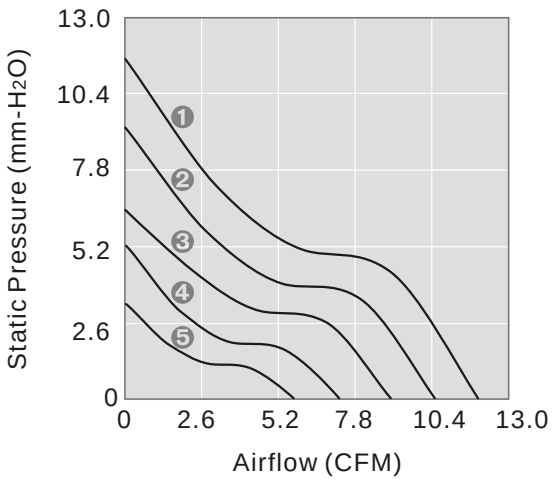

OUTLINE DIMENSIONS

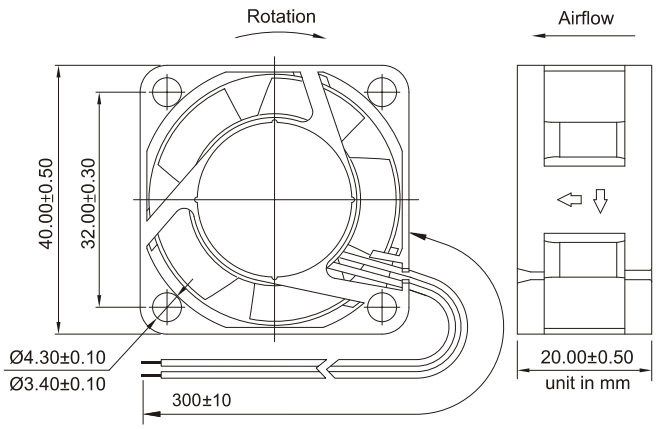

Please refer to *Model Numbering System* for bearing, function and speed level indication.
Specifications are subject to changes without notice. Please refer to the formally issued product specification via contacting Y.S. TECH sales department.
Visit Y.S. TECH web site at *http://www.ystech.com.tw* for updated information. Customized Specifications are designed accordingly